bauterTOUCH · Touch panels

Room Thermostat

Part no. BCTP08B



The BCTP08B is a modern room touch thermostat for precise climate control in hotel rooms, apartments and commercial spaces. It supports fan speeds (F1, F2, F3, auto) and fan-coil modes (on, off, eco).

A clear LED display shows room temperature, setpoint, mode and fan speed in °C or °F. Icons and labels are fully customisable.

4	LED	24 V	RS485
Touch buttons	Temperature display °C/°F	DC supply	Modbus RTU

General

Series	bauterTOUCH
Product type	Glass touch panel (capacitive)

Operation and display

Sensor type	Capacitive (touch)
Buttons	4 (setpoint –, setpoint +, fan, on/off)
Indicators	LED display: room temperature, setpoint, mode, fan speed
Functions	Setpoint ±, fan speed F1/F2/F3/auto, on/off/eco, °C/°F, night mode
Icon illumination (LED)	White, blue
Icons and labels	Fully customisable
Finishes (glass colour)	Black, gold, silver, white

Communication and electrical data

Communication	RS485, Modbus RTU
Supply voltage	24 V DC
Current consumption	≤ 30 mA
Connection type	Pluggable spring terminals (push-in), 2 × 2-pole top: 24V, GND · bottom: A, B (RS485)
Addressing	Modbus address via 4-pole DIP switch (rear)

Mechanical data

Mounting	In electrical installation box (flush/cavity wall box) Recommended: Ø 60 mm, min. 40 mm deep
Fixing	Mounting plate fixed to the box with 2 screws, device (glass front with housing) clipped on
Front dimensions (W × H)	95 × 95 mm
Projection from wall	12 mm (glass 4 mm + mounting plate 8 mm)
Installation depth behind wall	25 mm incl. terminals (housing 19 mm + terminals 6 mm)
Flush part (W × H)	42 × 50 mm (incl. snap-in lugs)
Weight	150 g
Material	Front: tempered glass Housing: ABS/PC
Degree of protection	IP20

Ambient conditions

Operating temperature	0 … +45 °C
Storage temperature	0 … +60 °C
Relative humidity	10 … 95 %, non-condensing

Standards and approvals

Compliance	CE, EU RoHS

Packaging

Packaging unit	1 piece
Packaging material	Cardboard
Packaging dimensions (L × W × H)	109 × 98 × 65 mm

Environment and disposal

Built to last	Designed for a long service life
Disposal (WEEE)	Dispose of in accordance with WEEE regulations – never with household waste

Dimensional drawing

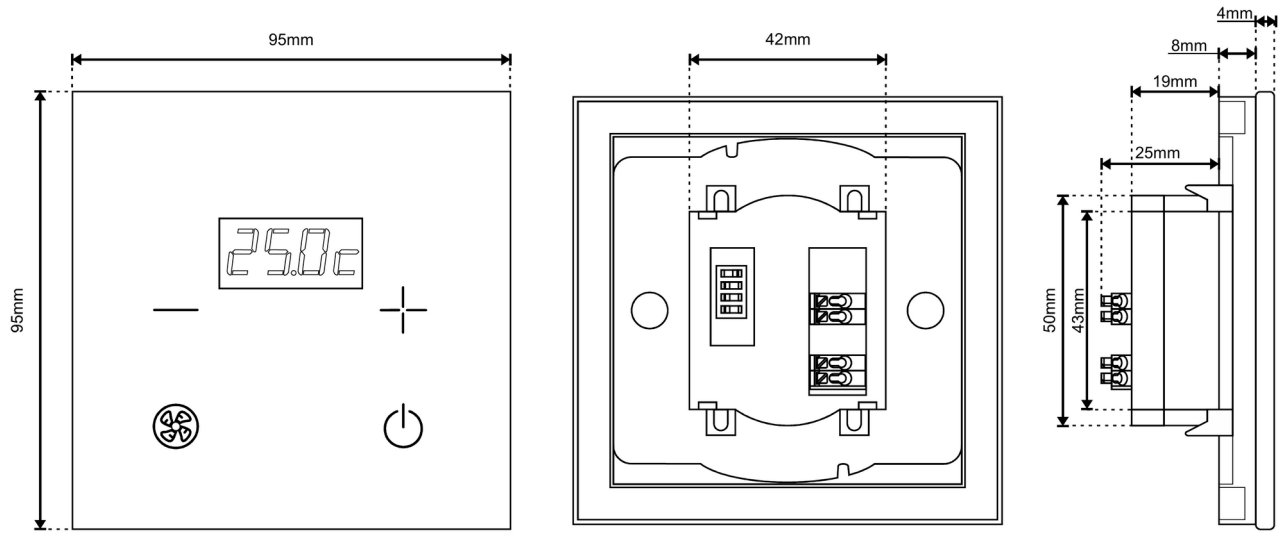

Dimensions in mm. Shown: BCTP08B – front, rear, side view