bauterTOUCH · Touch panels

Corridor Panel with Doorbell

Part no. **BCTP10B**



The BCTP10B is the corridor panel of the DND/MUR system. It displays Do Not Disturb and Make Up Room status, includes a doorbell button and optionally shows the room number for quick staff reference. Activating DND disables the doorbell.

The BCTP10B operates in sync with the BCTP09B in-room panel. Icons and labels are fully customisable.

1	2	24 V	4
Doorbell button	LED indicators DND/MUR	DC supply	Glass colours

General

Series	bauterTOUCH
Product type	Glass corridor touch panel
Compatible with	BCTP09B (in-room panel)

Operation and display

Sensor type	Capacitive (touch)
Buttons	1 (doorbell)
Indicators	DND / MUR (LED), optional room number
Functions	Doorbell, DND/MUR status display, doorbell disabled when DND is active
Icon illumination (LED)	Neutral, green, blue, red
Icons and labels	Fully customisable
Finishes (glass colour)	Black, gold, silver, white

Communication and electrical data

Communication	Via in-room panel BCTP09B
Supply voltage	24 V DC
Current consumption	≤ 30 mA
Connection type	Pluggable spring terminals (push-in), 2 × 4-pole right: GN, VD, RL, MR · left: EL, DN

Mechanical data

Mounting	In electrical installation box (flush/cavity wall box) Recommended: Ø 60 mm, min. 40 mm deep
Fixing	Mounting plate fixed to the box with 2 screws, device (glass front with housing) clipped on
Front dimensions (W × H)	95 × 95 mm
Projection from wall	12 mm (glass 4 mm + mounting plate 8 mm)
Installation depth behind wall	25 mm incl. terminals (housing 19 mm + terminals 6 mm)
Flush part (W × H)	42 × 55 mm (incl. snap-in lugs)
Weight	150 g
Material	Front: tempered glass Housing: ABS/PC
Degree of protection	IP20

Ambient conditions

Operating temperature	0 … +45 °C
Storage temperature	0 … +60 °C
Relative humidity	10 … 95 %, non-condensing

Standards and approvals

Compliance	CE, EU RoHS

Packaging

Packaging unit	1 piece
Packaging material	Cardboard
Packaging dimensions (L × W × H)	109 × 98 × 65 mm

Environment and disposal

Built to last	Designed for a long service life
Disposal (WEEE)	Dispose of in accordance with WEEE regulations – never with household waste

Dimensional drawing

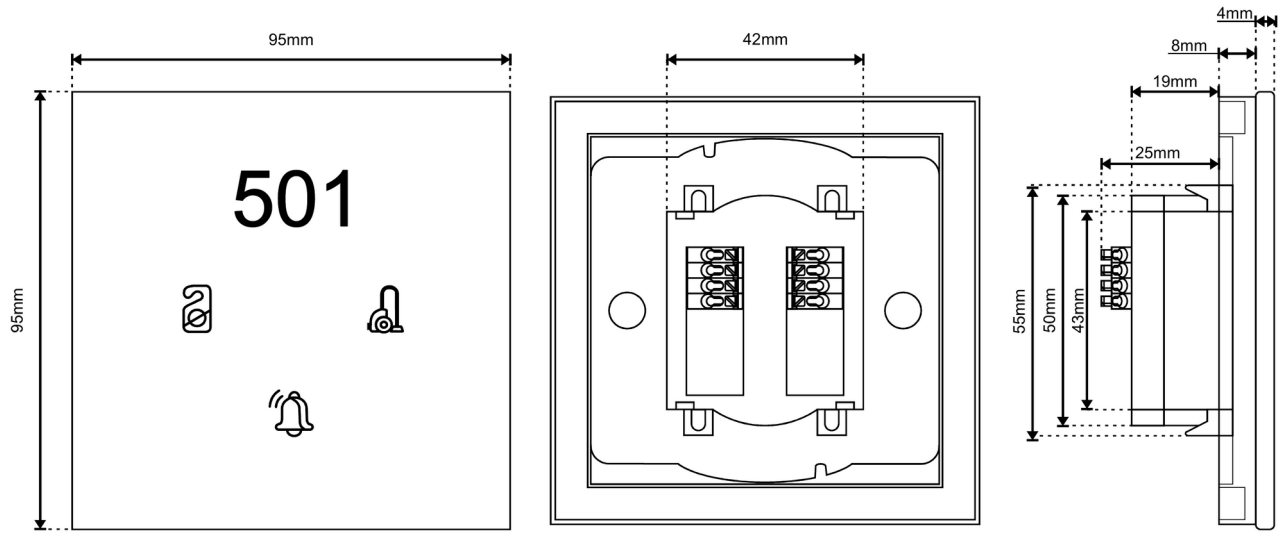

Dimensions in mm. Shown: BCTP10B – front, rear, side view